Shaft Shown in Full
C.C.W. Position

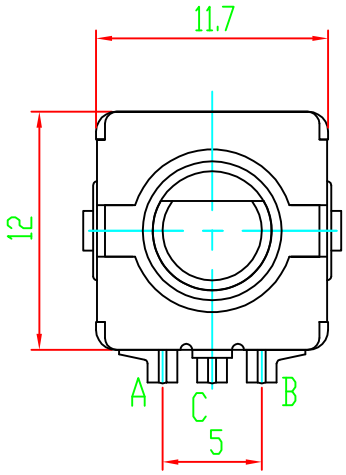

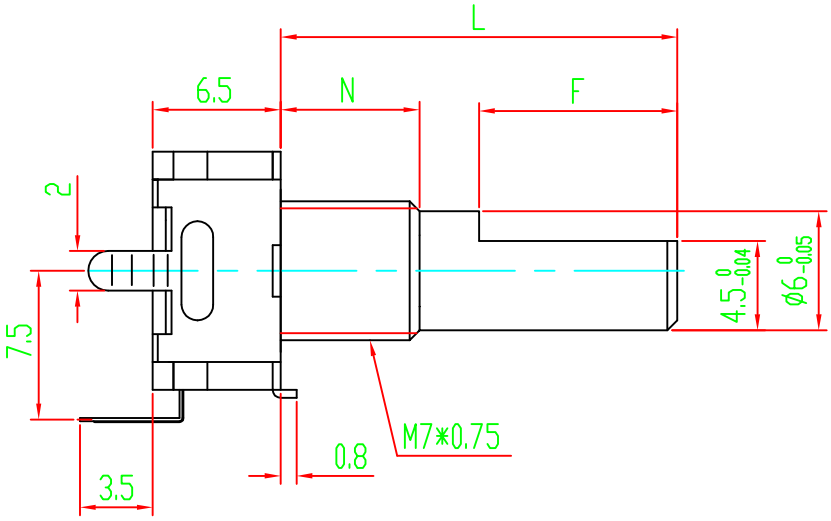

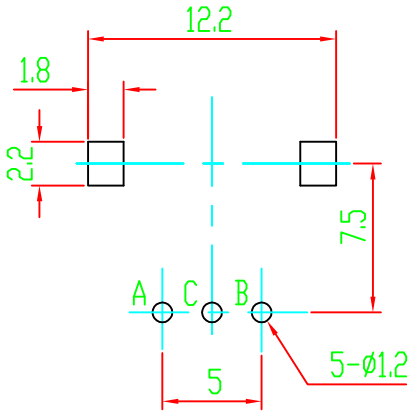

P.C.B MOUNTING DETAIL

L	15	16.7	20	20	25
F	7	8.7	10	12	18
N	7	7	7	7	7

02				05			
01				04			
	DATE	REVISION	APPROVED	03			

DRAW	CHKD	APPD

MODEL: EC11-1-D7*6.5-L20F10 螺纹轴套

DRAWING NO:

常州宇豪电子有限公司
CHANGZHOU YUHAO ELECTRONIC CO.,LTD.